Recall:

Def[typical sequence]:

x^n ε-typical if $|-1/n \log(p(x^n)) - H(X)| \leq \varepsilon$

It means $2^{-n(H(X)+\varepsilon)} \leq p(x^n) \leq 2^{-n(H(X)-\varepsilon)}$.

Def[Jointly typical sequence]:

$x^n y^n$ ε-jointly-typical if

(a) $|-1/n \log(p(x^n)) - H(X)| \leq \varepsilon$

(b) $|-1/n \log(p(y^n)) - H(Y)| \leq \varepsilon$

(c) $|-1/n \log(p(x^n y^n)) - H(XY)| \leq \varepsilon$

where $p(x^n y^n) = \Pi_{i=1}^n p(x_i y_i)$.

[The strong typicality equivalence of (c) implies those of (a,b).]

Def[Jointly-typical set]: $A_{n,\varepsilon} = \{x^n y^n \ \varepsilon\text{-jointly typical}\}$

Joint asymptotic equipartition (Joint AEP) theorem:

Let (X^n, Y^n) be sequences of length n

drawn iid according to $p(x^n\ y^n) = \Pi_{i=1}^{n}\ p(x_i\ y_i)$.

Then:

1. $\forall\ \delta>0,\ \exists\ n_0$ s.t. $\forall\ n \geq n_0$, $\Pr(X^n Y^n \in A_{n,\varepsilon}) > 1-\delta$
2. $(1-\delta)\ 2^{n\ [H(XY)-\varepsilon]} \leq |A_{n,\varepsilon}| \leq 2^{n\ [H(XY)+\varepsilon]}$
3. Let W^n, Z^n be rv's (same sample space as X^n, Y^n) w/ dist^n

   $q(x^n\ y^n) = p(x^n)\ p(y^n)$.

   i.e. q is a dist^n that has the same marginal as p,

   but outcomes x^n, y^n are independent.

   Then, $\Pr_q\ (W^n\ Z^n \in A_{n,\varepsilon}) \leq 2^{-n[I(X:Y)-3\varepsilon]}$

   Also, for large n,

   $$(1-\delta)\ 2^{-n[I(X:Y)+3\varepsilon]} \leq \Pr_q\ (W^n\ Z^n \in A_{n,\varepsilon})$$

Joint asymptotic equipartition (Joint AEP) theorem:

Proof:

[1] Given ε, δ, we can apply AEP on X^n, Y^n, and $(XY)^n$.

thus, $\exists n_0$ s.t. $\forall\ n \geq n_0$,

the ε-typical sets $T^X_{n,\varepsilon}$, $T^Y_{n,\varepsilon}$, $T^{XY}_{n,\varepsilon}$

all have prob $\geq 1-\delta/3$.

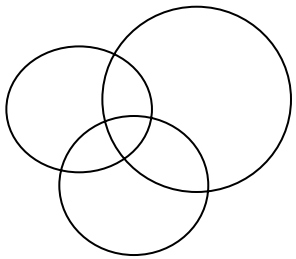

$$A_{n,\varepsilon} = T^X_{n,\varepsilon} \cap T^Y_{n,\varepsilon} \cap T^{XY}_{n,\varepsilon}$$

$$A_{n,\varepsilon}^c = T^X_{n,\varepsilon}{}^c \cup T^Y_{n,\varepsilon}{}^c \cup T^{XY}_{n,\varepsilon}{}^c$$

By the union bound,

$$\Pr(X^nY^n \in A_{n,\varepsilon}^c) \leq \Pr(X^nY^n \in T^X_{n,\varepsilon}{}^c) + \Pr(X^nY^n \in T^X_{n,\varepsilon}{}^c) + \Pr(X^nY^n \in T^{XY}_{n,\varepsilon}{}^c) \leq \delta$$

$$\Pr(X^nY^n \in A_{n,\varepsilon}) \geq 1-\delta.$$

<u>Joint asymptotic equipartition (Joint AEP) theorem:</u>

Proof:

[2] Using the same proof as in AEP, condition (c) implies

$$\forall\ x^n y^n \in A_{n,\varepsilon}\ ,$$

$$(1-\delta)\ 2^{-n(H(XY)+\varepsilon)} \leq p(x^n y^n) \leq 2^{-n(H(XY)-\varepsilon)}$$

Joint asymptotic equipartition (Joint AEP) theorem:

Proof:

[3] Let W^n, Z^n be rv's (same sample space as X^n, Y^n) w/ dist^n

$$q(x^n\, y^n) = p(x^n)\, p(y^n).$$

lower bound on $|A_{n,\varepsilon}|$ lower bounds on $p(x^n)$ and $p(y^n)$

$$(1-\delta)\, 2^{n[H(XY)-\varepsilon]} \times 2^{-n[H(X)+\varepsilon]} \times 2^{-n[H(Y)+\varepsilon]} = 2^{-n[I(X:Y)+3\varepsilon]} \leq$$

$$\boxed{\Pr_q\,(x^n\, y^n \in A_{n,\varepsilon}) = \sum_{x^n, y^n \in A_{n,\varepsilon}} p(x^n) p(y^n)}$$

$$\leq 2^{n[H(XY)+\varepsilon]} \times 2^{-n[H(X)-\varepsilon]} \times 2^{-n[H(Y)-\varepsilon]} = 2^{-n[I(X:Y)-3\varepsilon]}$$

upper bound on $|A_{n,\varepsilon}|$ upper bounds on $p(x^n)$ and $p(y^n)$

More observations:

Given $y^n \in T^Y_{n,\varepsilon}$, how many $x^n \in T^X_{n,\varepsilon}$ is s.t. $x^n y^n \in A_{n,\varepsilon}$?

Call this set S_{y^n}.

$p(x^n|y^n) = p(x^n y^n) / p(y^n) \approx 2^{-n[H(XY)-H(Y)]} = 2^{-n[H(X|Y)]}$

$\uparrow$ since $x^n y^n \in A_{n,\varepsilon}$,

$1 = \sum_{x^n \in S} p(x^n|y^n) \approx |S_{y^n}|\ 2^{-n[H(X|Y)]}$

Hence, $|S_{y^n}| \approx 2^{nH(X|Y)}$. Fraction of such $x^n \approx 2^{-nI(X:Y)}$.

Similarly, given $x^n \in T^X_{n,\varepsilon}$, $\approx 2^{nH(Y|X)}$ y^n's are jointly typical with it, and the fraction of such $y^n \approx 2^{-nI(X:Y)}$.

What's going on?

We're comparing 2 distributions, p and q, on $x^n y^n$. We can list x^n's along a column, y^n's along a row. Can focus only on x^n's , y^n's typical wrt to the common marginal dist^n's. Put $p(x^n y^n)$,$q(x^n y^n)$ in each box.

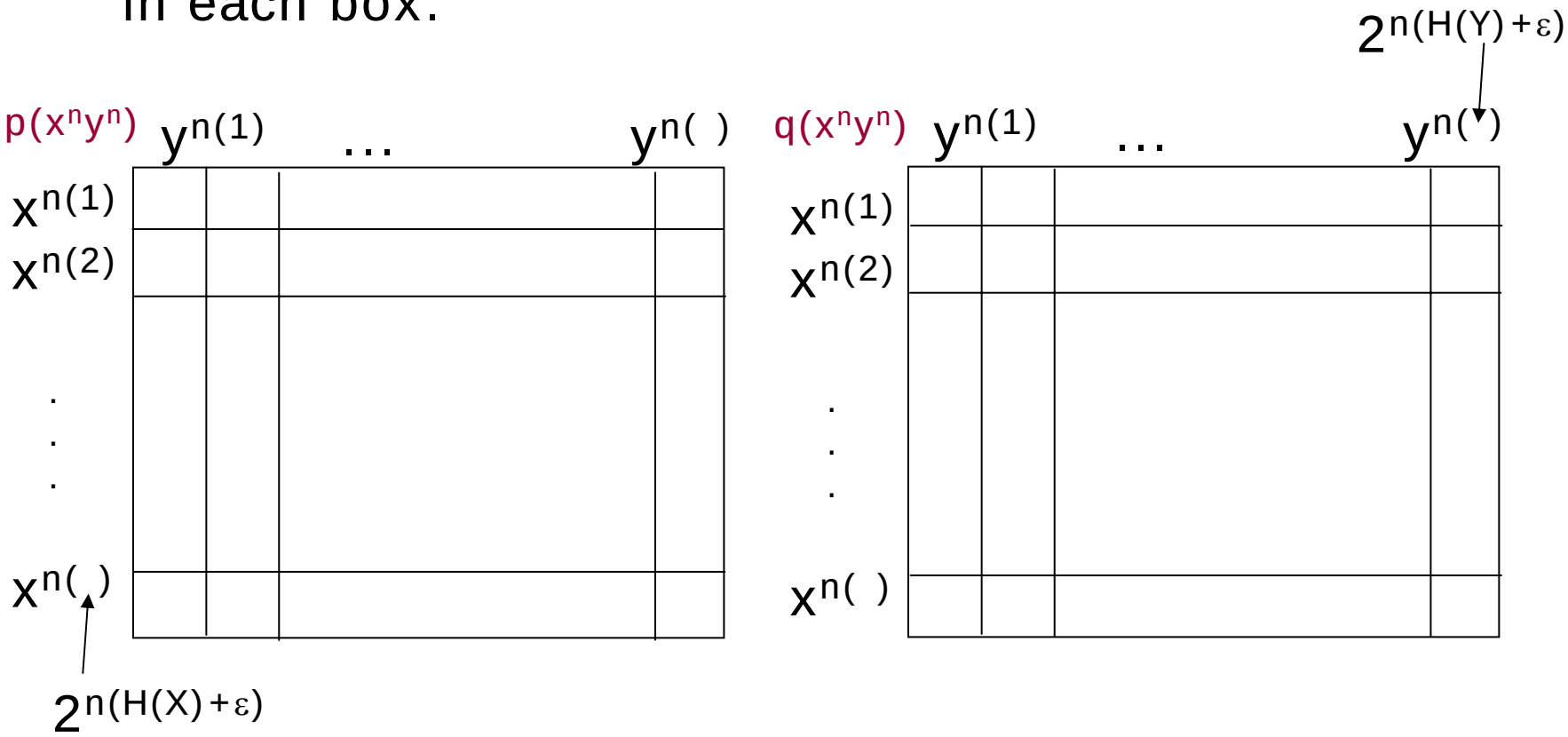

What's going on?

1. Mostly $\approx$ 0's except for $2^{n[H(XY)+\varepsilon]}$ ($\approx$ equiprobable) entries.
2. Fix a y^n (column). $\approx 2^{n[H(X|Y)\pm 2\varepsilon]}$ "nonzero" ($\approx$equiprobable) entries. A random entry (row) $x^n y^n$ is nonzero with prob $\approx 2^{n[H(X|Y)\pm 2\varepsilon]} / 2^{n[H(X)+\varepsilon]} = 2^{n[I(X:Y)\pm 3\varepsilon]}$. Similarly for fix x^n (row). So, LHS $\propto$ 0/1 matrix with $\approx$ equal row & column sums. AEP[3] holds row/column-wise.

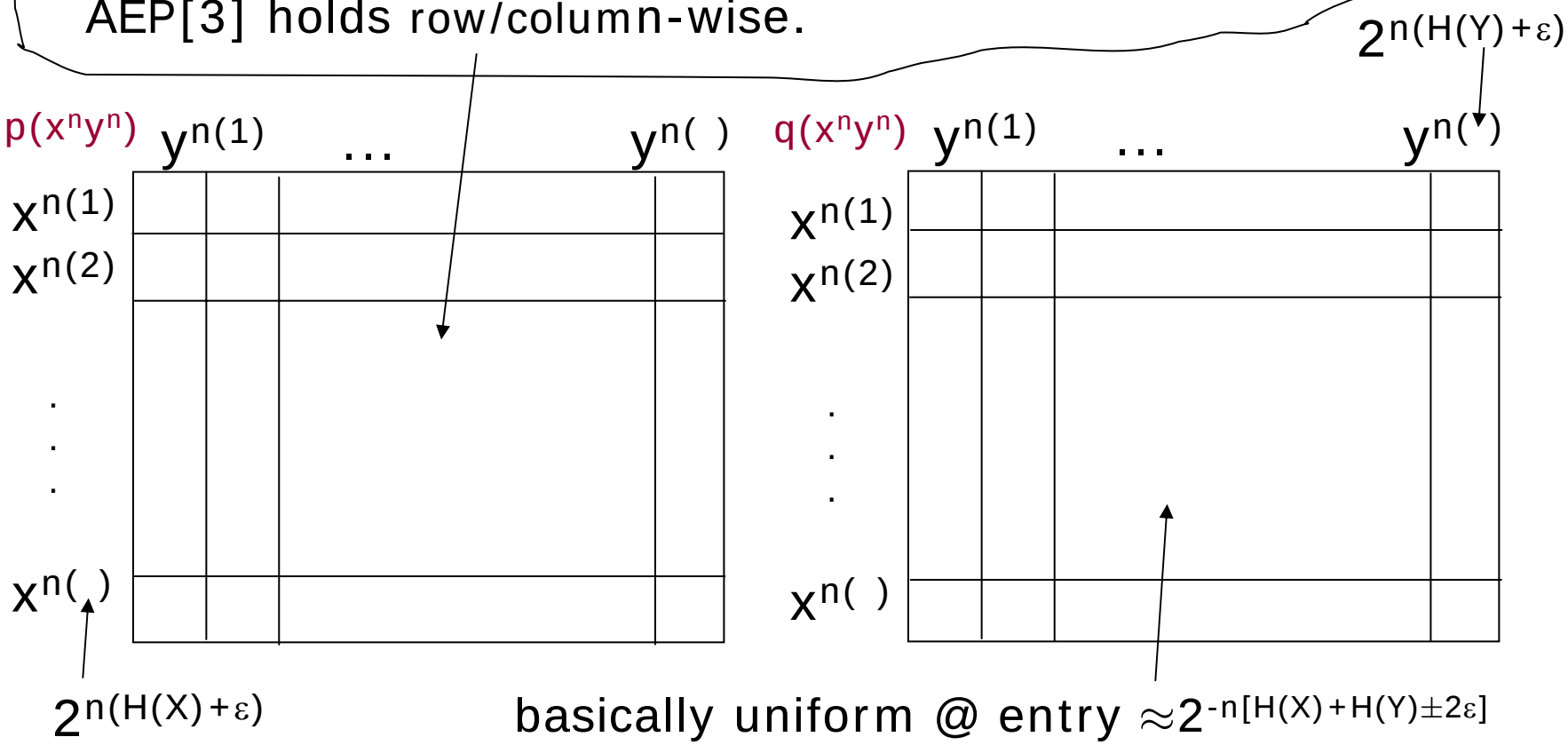

Now ready for Shannon's noisy coding theorem.

input/output dims

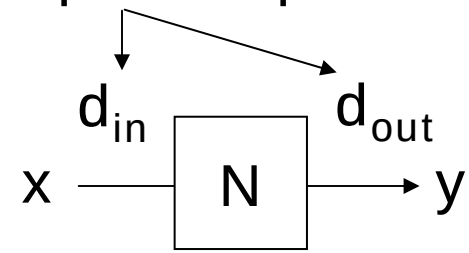

$N: x \to y$ with
prob $p(y|x)$

The rate R is called achievable if, $\forall$ n,

$\exists\ \eta_n\ ,\ \zeta_n \to 0$, E_n, D_n encoder & decoder s.t.

$\max_M \Pr(D_n \circ E_n(M) \neq M) \leq \zeta_n$, $M \in \{1,\cdots,k=2^{n(R-\eta_n)}\}$.

With rules still TBD: Note notation recycling.

$E_n(M) = x_M$ (labeled by M with length n) $= [x_{M1}\ x_{M2}\ \ldots\ x_{Mn}]$

D_n takes y^n to some W.

Channel capacity for N := sup over all achievable rates

$= \sup_{p(x)} I(X:Y) = \sup_{p(x)} I(X:N(X))$

<u>Proof structure:</u>

1. Direct coding theorem:

a. Show $\forall$ p(X), I(X:Y) is an achievable rate by analyzing the prob of failure of a random code and random message. That it vanishes $\Rightarrow \exists$ at least one code with vanishing average prob of error.

b. Choose a subset of better codewords that gives vanishing worse case prob of error.

2. Converse: At any higher rate, prob of error $\not\to 0$.

Part 1a. Let $R = I(X:Y) - \eta$ (will find η).

Need E_n, D_n with prob error $\leq \zeta_n$

* Fix any $p(x)$.

* Write down $A_{\varepsilon,n}$ for XY with $pr(Y=y|X=x)$ given by N.

* $\forall$ n (fixed from now on) let $k = 2^{n(R-\eta_n)}$. (Will find η_n.)

E_n: Pick k codewords (each x_{Mj} chosen iid $\sim p(x)$).
Call it $\mathcal{C}_n$. Fixed & known to Alice & Bob once choosen.

$x_1 = x_{11}, x_{12}, \ldots, x_{1n}$
$x_2 = x_{21}, x_{22}, \ldots, x_{2n}$
.
.
$x_K = x_{k1}, x_{k2}, \ldots, x_{kn}$

Everything refers to this particular code $\mathcal{C}_n$ from now on.

Part 1a. Let $R = I(X:Y) - \eta$ (will find η).

Need E_n, D_n with prob error $\leq \zeta_n$

* Fix any $p(x)$.

* Write down $A_{\varepsilon,n}$ for XY with $pr(Y=y|X=x)$ given by N.

* $\forall$ n (fixed from now on) let $k = 2^{n(R-\eta_n)}$. (Will find η_n.)

E_n: Pick k codewords (each x_{Mj} chosen iid $\sim p(x)$).
Call it $\mathcal{C}_n$. Fixed & known to Alice & Bob once choosen.

$x_1 = x_{11}, x_{12}, \ldots, x_{1n}$
$x_2 = x_{21}, x_{22}, \ldots, x_{2n}$ ← Say, $M=2$.
.
.
$x_K = x_{k1}, x_{k2}, \ldots, x_{kn}$

$E_n(2) = x_2 = x_{21}\ x_{22} \ldots x_{2n}$

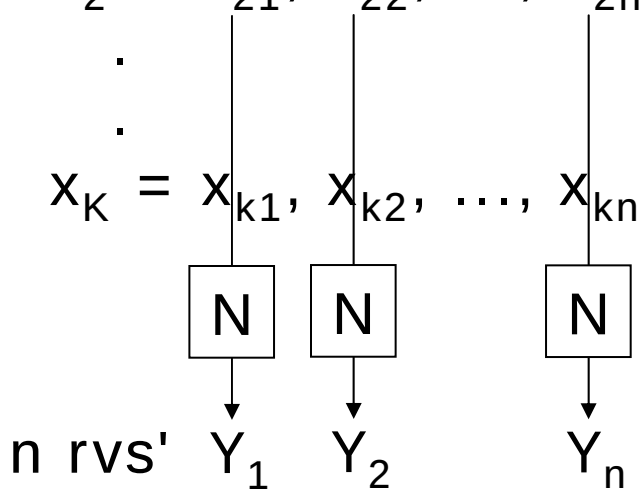

Let $y^n = y_1\ y_2 \ldots y_n$ be received.
$pr(y^n|x_M) = \Pi_{i=1}^{n}\ pr(y_i|x_{Mi})$

D_n: typical set decoding

Given y^n, let $S_{y^n} = \{x^n \mid x^n y^n \in A_{\varepsilon,n}\}$.

If there is a unique $x^n \in S_y$, output W s.t. $E_n(W)=x^n$.

Else, output $W=k+1$ (representing an error).

In what ways will this fail?

Either - no such x^n $\quad$ Err_0

- or $\exists M' \neq M$ with $E_n(M')y^n \in A_{\varepsilon,n}$ $\quad$ $Err_{M'}$

Prob of error for a given message M for code $\mathcal{C}_n$:

$$\lambda_M(\mathcal{C}_n) = \Pr(W \neq M | M\mathcal{C}_n) = \Pr(Err_0 \cup_{M' \neq M} Err_{M'} | M\mathcal{C}_n)$$

Worse case prob of error: $\quad P_e^{max}(\mathcal{C}_n) = \max_M \lambda_M(\mathcal{C}_n)$

Ave (arithmetic) prob of error: $\quad P_e^{ave}(\mathcal{C}_n) = 1/k \sum_M \lambda_M(\mathcal{C}_n)$

Now, upper bound, for this n:

$$\Pr_{\mathcal{C}_n} [\ P_e^{ave}(\mathcal{C}_n)\ ]$$

* just many iid draws to $X \sim p(x)$

wrt a particular $\mathcal{C}_n$ but averaged over M.

$$= \Pr_{\mathcal{C}_n} [\ 1/k \sum_M \lambda_M(\mathcal{C}_n)\ ]$$

each M chosen similarly thus λ_M independent of M

$$= \Pr_{\mathcal{C}_n} \lambda_1(\mathcal{C}_n)$$

$$= \Pr_{\mathcal{C}_n}(W \neq 1 | M=1) = \Pr_{\mathcal{C}_n}(Err_0 \cup_{M' \neq 1} Err_{M'} | M=1)$$

union bdd

$$\leq \Pr_{\mathcal{C}_n}(Err_0 | M=1) + (k-1) \Pr_{\mathcal{C}_n}(Err_{M' \neq 1} | M=1)$$

Bounding $\Pr_{\mathcal{C}_n}(\mathrm{Err}_0 | M=1)$:

By joint AEP [1], $\forall\ \delta>0$, $\exists\ n_0$ s.t. $\forall\ n \geq n_0$,

$$\Pr(X^n Y^n \in A_{n,\varepsilon}) > 1-\delta$$

Given n, $\exists\ \delta_n$, ε_n for which $\Pr(X^n Y^n \in A_{n,\varepsilon_n}) > 1-\delta_n$.

[And $\delta_n, \varepsilon_n \to 0$.]

Here:

$x_{M=1} = x_{11} \ldots x_{1n}$ drawn iid $\sim p(x)$, and

$y^n = y_1 \ldots y_n$ drawn $\sim p(y|x_{1i})$

Thus, $x_{1i} y_i$ iid $\sim p(xy)$ and $\Pr(x_{M=1}\, y^n \in A_{n,\varepsilon_n}) > 1-\delta_n$.

$\Pr_{\mathcal{C}_n}(\mathrm{Err}_0 | M=1) \leq \delta_n$.

BACK 1 SLIDE.

for 1 M'

$N^{\otimes n}(x_1)$

Bounding $\Pr_{\mathcal{C}_n}(\mathrm{Err}_{M'\neq 1}|M=1) = \Pr_{\mathcal{C}_n}(x_{M'}y^n \in A_{n,\varepsilon_n})$:

By joint AEP [3], $\forall\ \delta>0$, $\exists\ n_0$ s.t. $\forall\ n\geq n_0$,

$$W^n, Z^n \sim q(x^n\ y^n) = p(x^n)\ p(y^n).$$

$$(1-\delta)\ 2^{-n[I(X:Y)+3\varepsilon]} \leq \Pr_q(W^nZ^n \in A_{n,\varepsilon}) \leq 2^{-n[I(X:Y)-3\varepsilon]}$$

Given n, $\exists\ \delta_n$, ε_n for which

$$(1-\delta_n)\ 2^{-n[I(X:Y)+3\varepsilon_n]} \leq \Pr_q(W^nZ^n \in A_{n,\varepsilon_n}) \leq 2^{-n[I(X:Y)-3\varepsilon_n]}$$

[And $\delta_n, \varepsilon_n \to 0$.]

Here:

$x_{M'} = x_{M'1} \ldots x_{M'n}$ drawn independent of x_1 and

$y^n = y_1 \ \ldots\ y_n$ iid $\sim p(y|x_{1i})$, independent of $x_{M'}$.

W^n, Z^n

Thus, $\Pr_{\mathcal{C}_n}(\mathrm{Err}_{M'\neq 1}|M=1) \leq 2^{-n[I(X:Y)-3\varepsilon_n]}$.

Now, upper bound, for this n:

$$\Pr_{\mathcal{C}_n}\left[\, P_e^{ave}(\mathcal{C}_n) \,\right]$$

$$\leq \Pr_{\mathcal{C}_n}(Err_0 | M=1) + (k-1)\Pr_{\mathcal{C}_n}(Err_{M'\neq 1} | M=1)$$

$$\leq \delta_n + (k-1)\, 2^{-n[I(X:Y)-3\varepsilon_n]}$$

but $k = 2^{n(R-\eta_n)}$, $R = I(X:Y)-\eta$

$$\leq \delta_n + 2^{n[I(X:Y)-\eta-\eta_n]}\, 2^{-n[I(X:Y)-3\varepsilon_n]}$$

$$\leq \delta_n + 2^{n[-\eta-\eta_n+3\varepsilon_n]}$$

$$\leq \delta_n + 2^{-n\eta} =: \zeta^{ave}_n .$$

choose η = small constant

$\eta_n = 3\varepsilon_n$.

Thus, $\exists\ \mathcal{C}_n\ (E_n, D_n)$ with $P_e^{ave}(\mathcal{C}_n) \leq \zeta^{ave}_n$.

Part 1b.

Worse case prob of error: $P_e^{max}(\mathcal{C}_n) = \max_M \lambda_M(\mathcal{C}_n)$

Ave (arithmetic) prob of error: $P_e^{ave}(\mathcal{C}_n) = 1/k \sum_M \lambda_M(\mathcal{C}_n)$

For the code $\mathcal{C}_n$ obtained in 1a, order M in ascending order of $\lambda_M(\mathcal{C}_n)$. Keep the first half. Call this new code $\mathcal{C}'_n$.

replacing large half of $\lambda_M(\mathcal{C}_n)$ by the median

$$P_e^{ave}(\mathcal{C}_n) = 1/k \sum_M \lambda_M(\mathcal{C}_n)$$
$$\geq 1/k \left[\sum_{M \notin \mathcal{C}'_n} P_e^{max}(\mathcal{C}'_n) + \sum_{M \in \mathcal{C}'_n} \lambda_M(\mathcal{C}_n) \right]$$
$$\geq 1/2\, P_e^{max}(\mathcal{C}'_n).$$

Thus, $\mathcal{C}'_n$ has worse case error prob $\leq \zeta_n^{ave}/2 =: \zeta_n \to 0$.

[rate for $\mathcal{C}'_n$ = rate for $\mathcal{C}_n$ - 1/n.]

Thus $R = I(X:Y) - \eta$ achievable on $\mathcal{C}'_n$ for any $\eta > 0$.

"Sup over R" gives capacity $\geq \max_{p(x)} I(X:Y)$.